TRAEGER®
WOOD FIRED GRILLS

# OWNER'S MANUAL

## WASATCH™ 2-ZONE FLAT TOP GRILL

**MODEL TF2NN46DCC**

**Scan here to access this manual in different languages, as well as to learn how to set up, season, and get the most out of your Flat Top Grill.**

T18341

# IMPORTANT SAFETY PRECAUTIONS

## READ ALL INSTRUCTIONS BEFORE INSTALLING AND USING YOUR TRAEGER® FLAT TOP GRILL

**SAFETY ALERT KEY**

**⚠ DANGER** Indicates an imminently hazardous situation which, if not avoided, may result in death or serious injury.

**⚠ WARNING** Indicates the possibility of serious bodily injury if the instructions are not followed.

**⚠ CAUTION** Indicates a potentially hazardous situation which, if not avoided, may result in minor or moderate injury.

A MAJOR CAUSE OF FIRES IS FAILURE TO MAINTAIN REQUIRED CLEARANCES (AIR SPACES) BETWEEN COMBUSTIBLE MATERIALS AND YOUR FLAT TOP GRILL. IT IS OF UTMOST IMPORTANCE THAT THIS PRODUCT BE INSTALLED ONLY IN ACCORDANCE WITH THESE INSTRUCTIONS.

When properly operated and maintained, cooking with a Traeger® Flat Top Grill brings years of enjoyment to you and your friends and family. Your new Traeger® Flat Top Grill is specially designed to make cooking easier while giving you optimal performance to create the most flavorful food.

Please read this entire manual before installation and operation. Anyone who uses this Flat Top Grill should also read the entire manual before operating it. Failure to follow these instructions could result in property damage, bodily injury, or even death. Contact local building or fire officials about restrictions and installation inspection requirements in your area. **Save these instructions.** If you are assembling this unit for someone else, provide this manual for the owner to read and save for future reference.

**⚠ DANGER**

**If you smell gas:**

- **Shut off gas to the appliance.**
- **Extinguish any open flame.**
- **Open lid.**
- **If odor continues, keep away from the appliance and immediately call your gas supplier or your fire department.**

**⚠ WARNING**

- **Do not store or use gasoline or other flammable liquids or vapors in the vicinity of this or any other appliance.**
- **An LP tank not connected for use shall not be stored in the vicinity of this or any other appliance.**

**⚠ WARNING Fire Hazard**

- When operating your Traeger® Flat Top Grill, maintain the **MINIMUM** distances shown below from the Flat Top Grill to any nearby combustibles, including wooden railings, home siding, window frames, furniture, trees, and trash receptacles, etc.

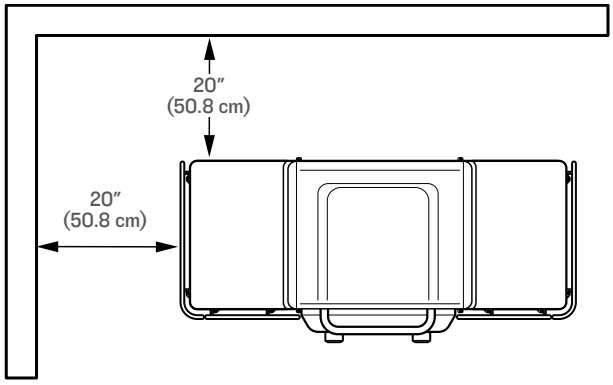


- **Do Not** install or operate the Flat Top Grill indoors, in or on recreational vehicles or boats, or under a combustible ceiling or overhang.
- **Do Not** install or operate your Traeger® Flat Top Grill on combustible floors or surfaces.
- **Do Not** store or use a spare LP tank, gasoline, or other flammable vapors, liquids, or materials in, under, or in the vicinity of the Flat Top Grill.
- Always remove cooking tools and ingredients while the Flat Top Grill is unattended to reduce the risk of fire.
- **Never** fill an LP tank beyond 80% full. An overfilled or improperly stored tank is a hazard due to possible gas release from the safety relief valve.

- **Never** leave an LP tank inside a vehicle; it may become overheated by the sun.
- **Do Not** obstruct the flow of combustion and ventilation air of the Flat Top Grill, cover slots, holes, or passages in the Flat Top Grill, or cover the Flat Top Grill cooktop with material such as aluminum foil. Doing so blocks airflow through the Flat Top Grill and may cause carbon monoxide poisoning. Aluminum foil linings may trap heat, causing a fire hazard.
- Clean your Flat Top Grill and replace the grease keg liner regularly. Always wait until the Flat Top Grill has completely cooled before removing the grease keg.

**⚠ WARNING Fire Hazard**

- If the Flat Top Grill does not ignite within 5 seconds, turn burner controls OFF (**O**), wait 5 minutes to allow gas to dissipate, and repeat ignition procedure. If Flat Top Grill does not ignite, gas will continue to flow out of burner and could accidentally ignite.
- Inspect the hose of the Flat Top Grill's LP tank before each use. If there is evidence of abrasion, wear, cuts, or leaks, the hose must be replaced prior to operation.
- If grease or other hot material drips from the Flat Top Grill onto valve, hose or regulator, turn off gas supply immediately. Determine the cause and correct, clean and inspect valve, hose and regulator. Before continuing, perform a leak test.
- **Never** use an LP tank that is visibly rusted, damaged, or out of date.

**⚠ WARNING Burn Hazard**

- **Never** close the lid of the Flat Top Grill when operating or hot. Let the Flat Top Grill cool completely before closing the lid.
- The Flat Top Grill cooktop and surrounding areas are extremely hot during and after operation. Use caution when loading food onto the cooktop and when inserting, removing, or adjusting your meat probes.
- **Do Not** touch the cooktop, the lip around the cooktop, or the faceplate during or immediately after operation. Always use heat protection when operating the Flat Top Grill.
- **Never** move the Flat Top Grill when it is operating or hot. Let the Flat Top Grill cool thoroughly and close the Flat Top Grill lid before moving or attempting to transport. If you are transporting your Flat Top Grill in a vehicle after cooking on it, make sure the flame is completely out, the gas is turned off, and the Flat Top Grill is cold before placing it in any vehicle.
- **Never** leave the Flat Top Grill unattended when young children or pets are present.
- Grill handles and knobs may become hot to the touch or exceed safe touch temperatures when operated under extreme conditions including, but not limited to, prolonged exposure to direct sunlight, high ambient temperatures, or in the event of a grease fire. **ALWAYS** use heat protection when operating or handling your grill under these conditions.

**⚠ WARNING Product Hazard**

- **Never** modify the Flat Top Grill or install any parts or components not authorized by Traeger for use with this product. Any modification of this Flat Top Grill or installation of unauthorized parts or components will void the warranty and may create a safety hazard including, without limitation, a fire.
- Make sure the Flat Top Grill is leveled.
- **Never** move the Flat Top Grill with the lid open. Always close the Flat Top Grill lid prior to moving.
- **Never** move the Flat Top Grill with the propane tank connected and on the base. Always disconnect the propane tank and remove from the base prior to moving.
- **NEVER** add cold or frozen food or liquids to a hot Flat Top Grill. Doing so may cause the Flat Top Grill to warp.
- Appliance installation must conform with local codes, or in the absence of local codes, with either the National Fuel Gas Code, ANSI Z223.1/NFPA 54, ANSI/NFPA 58, Natural Gas and Propane Installation Code, CSA B149.1, or Propane Storage and Handling Code, B149.2, or the Standard for Recreational Vehicles, ANSI A 119.2/NFPA 1192, and CSA Z240 RV Series, Recreational Vehicle Code, as applicable.
- Fuels used in liquefied propane gas appliances, and the products of combustion of such fuels, can expose you to chemicals, including benzene, which is known to the State of California to cause cancer and cause birth defects or other reproductive harm.
- If the Flat Top Grill is not in use, the gas must be turned off at the LP tank.
- The Flat Top Grill can be stored indoors only if the tank is disconnected and removed from the grill. The tank must be stored outdoors out of the reach of children and should not be stored in a building, garage, or any other enclosed area.
- Place a dust cap on the tank valve outlet whenever the tank is not in use. Only install on the tank valve outlet the type of dust cap that is provided with the tank valve. Other types of caps or plugs can result in leakage of propane.

# SAVE THESE INSTRUCTIONS

WELCOME
TO THE
TRAEGERHOOD™

# TABLE OF CONTENTS


2 IMPORTANT SAFETY PRECAUTIONS

6 GETTING TO KNOW YOUR FLAT TOP GRILL

8 FLAT TOP GRILL FEATURES

9 ONBOARDING 1: INSTALLING PROPANE TANK

11 ONBOARDING 2: SEASONING YOUR FLAT TOP GRILL

13 USING YOUR FLAT TOP GRILL

14 PRO TIPS FOR COOKING ON YOUR FLAT TOP GRILL

15 WHEN COOKING IS COMPLETED

16 GREASE MANAGEMENT

16 SHUTTING DOWN YOUR FLAT TOP GRILL

17 MAINTAINING YOUR FLAT TOP GRILL

20 TROUBLESHOOTING

20 OPERATING TIPS

21 SERVICE

22 WARRANTY

# GETTING TO KNOW YOUR FLAT TOP GRILL

Refer to the Assembly Guide to assemble and install your Traeger® Wasatch™ Flat Top Grill.

## PARTS AND FEATURES

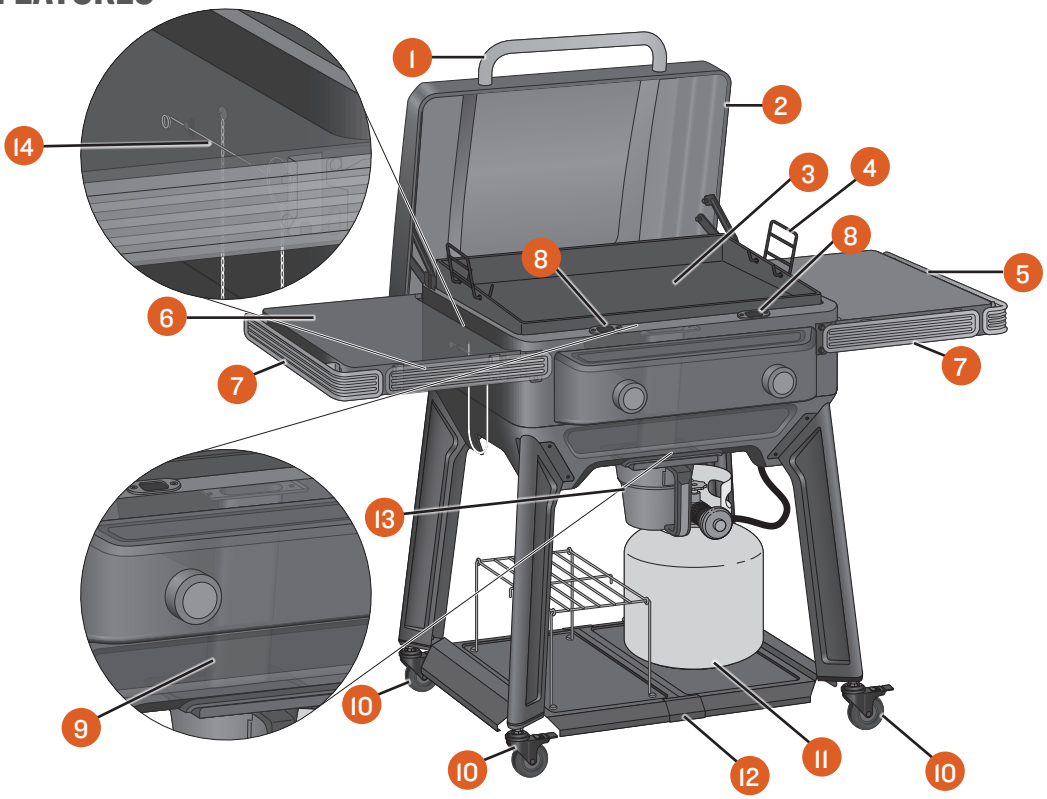


| PART | DESCRIPTION | PART | DESCRIPTION |
|---|---|---|---|
| 1 | LID HANDLE | 8 | FLAME WINDOW |
| 2 | GRILL LID | 9 | GREASE CHUTE |
| 3 | COOKTOP | 10 | LOCKING CASTER |
| 4 | COOKTOP CLAW | 11 | LIQUID PROPANE (LP) GAS TANK (NOT INCLUDED) |
| 5 | RIGHT FOLDING SIDE SHELF | 12 | BOTTOM SHELF |
| 6 | LEFT FOLDING SIDE SHELF | 13 | EZ-CLEAN™ GREASE KEG |
| 7 | P.A.L. POP-AND-LOCK™ ACCESSORY RAIL | 14 | MATCHSTICK HOLDER |

### WEIGHT CAPACITIES

**Folding Side Shelves: 50 lbs (23 kg)**

**Bottom Shelf Components:**

**Wire Rack: 10 lbs (4.5 kg)**

**Propane Tank Rest – one standard tank: ~40 lbs (18 kg)**

**Total Bottom Shelf Capacity: 100 lbs (45 kg) of total weight (40 lbs [18 kg] from propane tank, 10 lbs [4.5 kg] from wire rack, and 50 lbs [23 kg] additional on the shelf)**

## CONTROL PANEL

| PART | DESCRIPTION | PART | DESCRIPTION |
|---|---|---|---|
| 1 | LEFT BURNER CONTROL KNOB | 2 | RIGHT BURNER CONTROL KNOB |

## PROPANE TANK AND FITTINGS

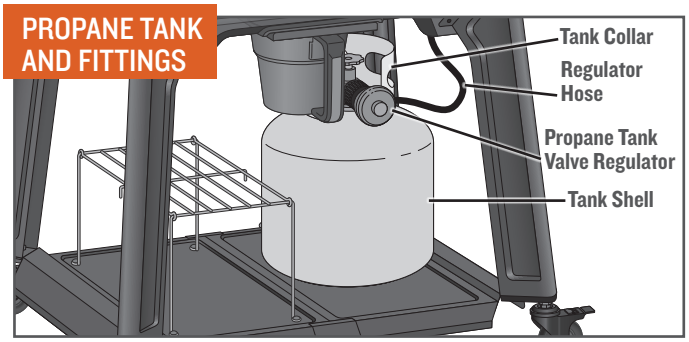


The Flat Top Grill can be used with any standard 20 lb (9 kg) propane tank. It must be a maximum of 12 1/4" in diameter; 18" high, and with right-handed connection threads. The tank must be marked in accordance with the latest U.S. Department of Transportation specifications for LP gas tanks or DOT. CFR49 or National Standards of Canada CAN/CSA-B359 Cylinders, Spheres and Tubes for the Transportation of Dangerous Goods. A Propane Tank with an OPD (Overfill Prevention Device) must be used at all times. If your Wasatch™ Flat Top Grill is for liquid propane application, an LP regulator set for 11" WC and LP gas use only must be used. You can typically purchase a new propane tank at your local gas station, supermarket, or stores where outdoor gas appliances are sold. Once you have purchased a propane tank, when empty, you can either exchange it for a new, full tank or have it refilled at your local gas supplier.

**NOTE:** When deciding between refilling and exchanging a propane tank, keep in mind that local suppliers may not fill the tank 100% full.

### INSTALLING OR REMOVING PROPANE TANK

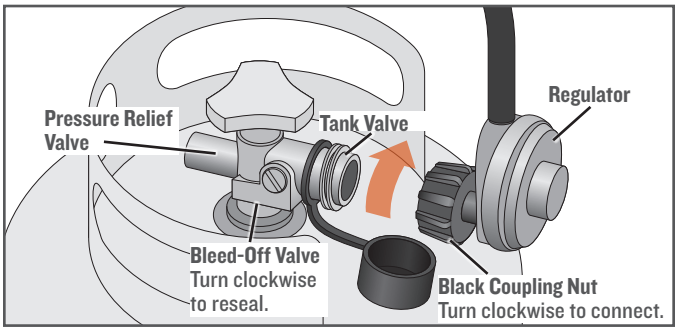


**To Connect**

1. Ensure that there is no debris caught in the head of the gas tank and head of the regulator valve.
2. Insert the nipple of the valve coupling into the tank valve and tighten the black coupling nut by turning it clockwise with one hand while holding the regulator with the other hand. Hand-tighten only.

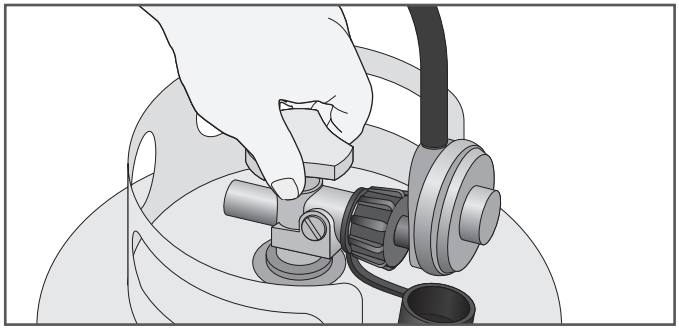

**To Disconnect**

1. Always confirm that the tank valve is in the "OFF" position before disconnecting the gas supply.
2. Hold the regulator with the one hand and loosen the black coupling nut by turning it counterclockwise with the other hand.

**IMPORTANT:** Disconnect the propane tank from the regulator valve when the appliance is not in use.

# FLAT TOP GRILL FEATURES

## FOLDING SHELVES

The side shelves of your Flat Top Grill fold for easy storage. To fold your shelves, lift straight up to disengage from the shelf bracket and fold down (use both hands—one on the back and one on the front of the shelf). Make sure to remove accessories from the P.A.L. rail before folding the shelves.

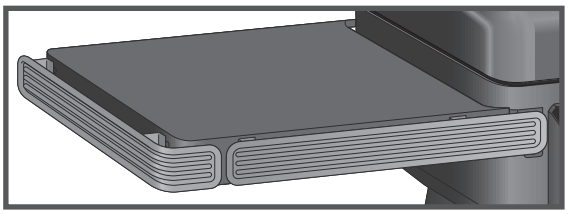

## P.A.L. RAILS

Traeger's accessory rails allow you to hang tools, storage bins, and more. Check Traeger.com for great accessories to get the most out of your Traeger® Wasatch™ Flat Top Grill.

**⚠ WARNING** **Do not** use P.A.L. accessory shelves. They are not compatible with this Wasatch™ Flat Top Grill.

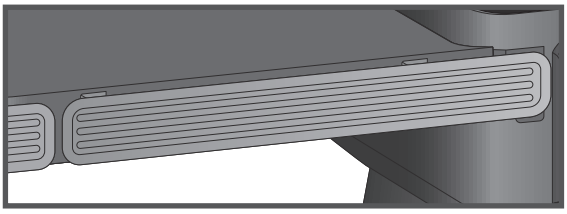

## REGISTER YOUR FLAT TOP GRILL

Use the free Traeger App to open a whole new flavor frontier. Register your Traeger® Wasatch™ Flat Top Grill for a guided onboarding process, digital assembly guides, a multitude of new recipes, and more.

Scan this QR code or visit www.traeger.com/register-grill to register your Flat Top Grill:

**PRO TIP:** You'll need your serial number to register your Flat Top Grill. This can be found on the back of the grill.

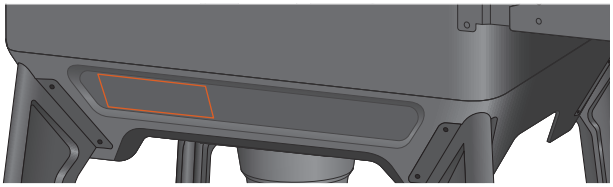

## LEVELING GRILL

1

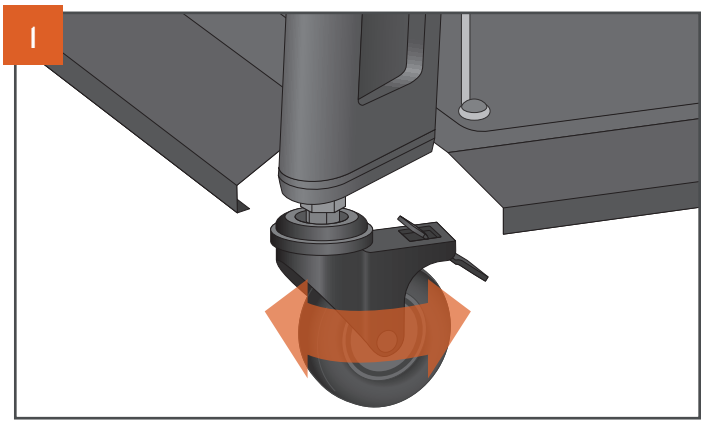

Level grill by adjusting the position of each caster individually. To adjust caster position, set the caster lock and rotate the caster by hand. Adjusting to the right will shorten the position, and to the left will extend it. Once you've got your desired level, proceed to step 2.

2

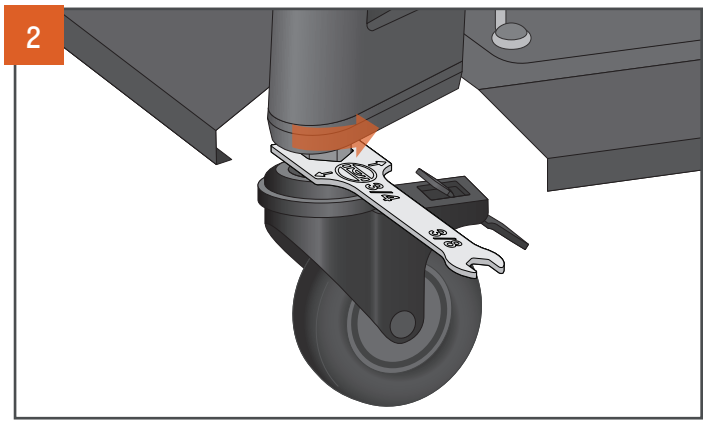

Tighten jam nut all the way with included wrench to lock leveling. The jam nut is underneath the leg but above the caster.

**⚠ WARNING** **Personal Injury Hazard**

Do not exceed 1.25" of leveling, or the caster will fall out of the leg, possibly damaging the product or injuring you. The maximum extension should be less than the width of the large side of the assembly wrench.

# ONBOARDING I: INSTALLING PROPANE TANK

## REQUIRED PRIOR TO FIRST COOK

**PRO TIP:** Open the free Traeger App to register your Traeger® Wasatch™ Flat Top Grill and complete a guided onboarding process.

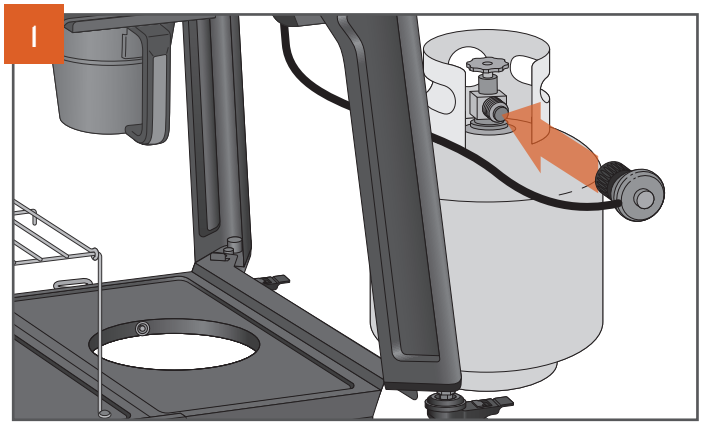


Be sure both control knobs are in the OFF (O) position. Screw the end of the regulator onto the propane tank valve. Hand-tighten.

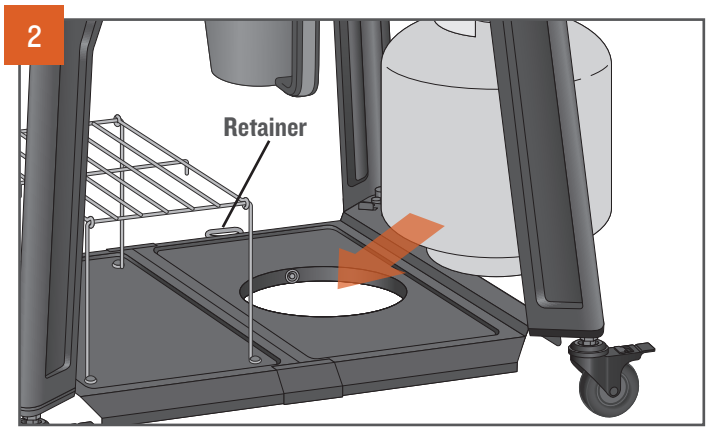


With the regulator connected to the tank, place the tank in the opening in the bottom shelf. Secure the tank in place by hand-tightening the tank retainer.

## CHECKING FOR GAS LEAKS

**⚠ WARNING Fire Hazard**

**NEVER** use an open flame, such as a lighted match, to test for leaks.

The following diagram is for informational purposes only. These locations are not the only points to check, nor the only potential areas for a gas leak to be present. Ensure the leak test includes all valves, pipe connections, joints, lines, and every point from the gas source to the burners.

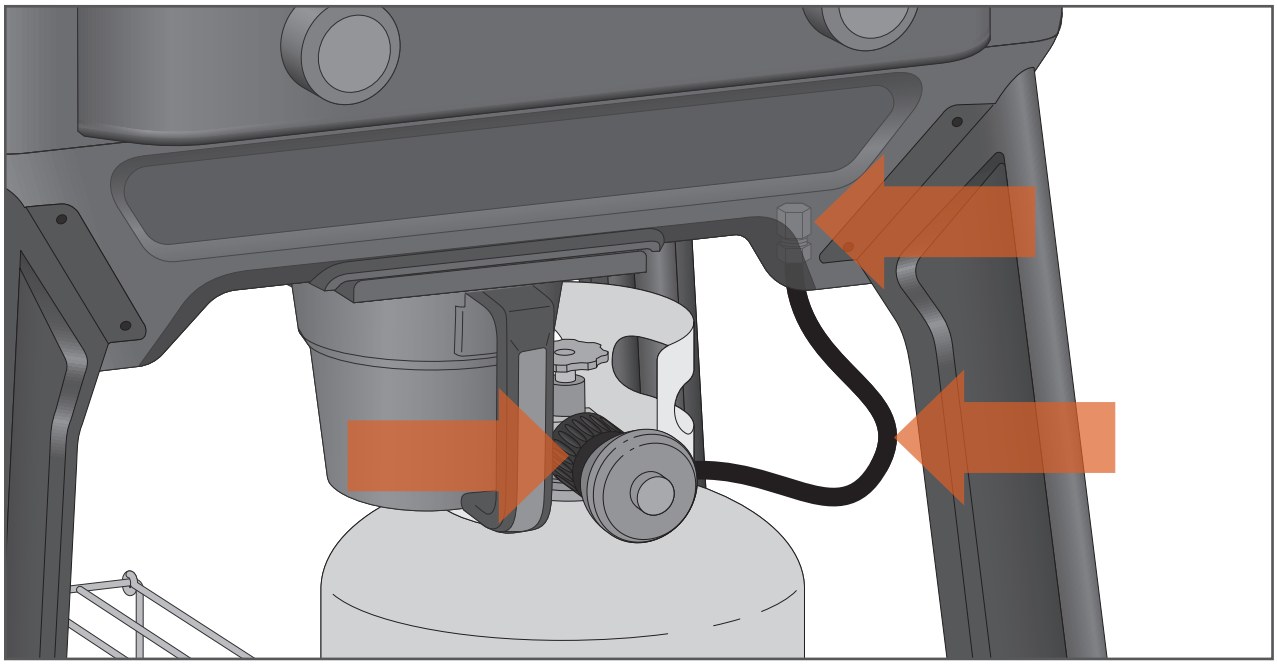

# ONBOARDING I: INSTALLING PROPANE TANK CONTINUED

Perform a leak test after a new tank is added, after service, or following a period of non-use to ensure that there are no gas leaks. In addition, whenever the gas tank is connected to the regulator or whenever any part of the gas system is disconnected or replaced, perform a leak test.

**⚠ DANGER**

**If you smell gas:**

- **Shut off gas to the appliance.**
- **Extinguish any open flame.**
- **Open lid.**
- **If odor continues, keep away from the appliance and immediately call your gas supplier or your fire department.**

**⚠ WARNING Fire Hazard**

Always leak test your appliance outdoors in a well-ventilated area. **NEVER** smoke or permit sources of ignition in the area while doing a leak test. **DO NOT** use a flame, such as a lighted match, to test for leaks. Use a solution of soapy water.

- Check hose for signs of abrasions, cracks, or leaks. Replace if worn.
- Prepare a leak testing solution of soapy water by mixing one part liquid soap to one part water in a spray bottle.
- Make sure both control knobs are in the OFF (O) position.
- Turn the LP tank valve knob counterclockwise one turn to open.
- Apply the leak-testing solution by spraying or brushing it on joints of the gas delivery system. This includes all valves, pipe connections, joints, lines and every point from the gas source to the burners.

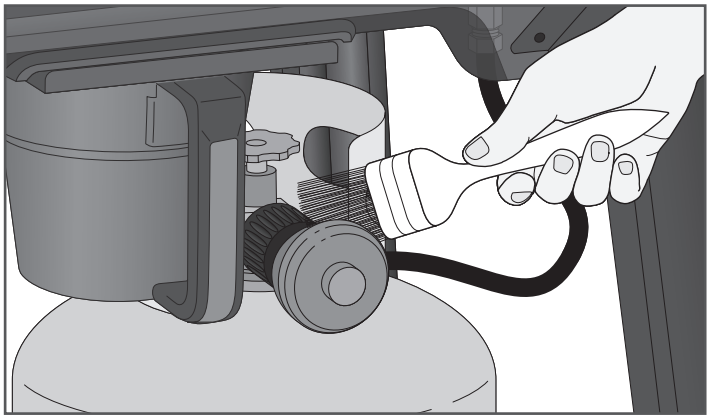

- Bubbles appearing in the soap solution and/or a faint gas smell (typically, gas has a rotten egg smell) indicates that a leak is present. Do not attempt to ignite the Flat Top Grill.
- Do not use the appliance until the leak is corrected.
- Stop a leak by tightening the loose joint and/or resealing with thread sealant, removing sealant in the event of a flared connection, or by replacing the faulty part with a replacement part recommended by the manufacturer. Do not attempt to repair the tank valve if it is damaged. The tank must be discarded at a proper LP tank location and then replaced.
- If you are unable to stop a leak, turn the tank valve knob clockwise until it is fully closed, shut off the gas supply to the appliance, and release pressure in the hose and manifold by pushing in and turning either of the control knobs one quarter turn counterclockwise.
- Remove the LP tank from the appliance.
- Call an authorized gas appliance service technician or an LP gas dealer.
- All leaks must be corrected immediately. Remember: before exchanging an empty tank for a new one, make sure all valve knobs are in the closed position. Leaving valve knobs open can create a low flow of gas through the Flat Top Grill, which would require the tank to be disconnected from the regulator, and then reconnected to reset the regulator.

# ONBOARDING 2: SEASONING YOUR FLAT TOP GRILL

## ALSO REQUIRED PRIOR TO FIRST COOK.

In order to ensure the best flavor, optimal performance, and proper and safe operation of the Flat Top Grill, follow the instructions below to season your Flat Top Grill.

**NOTE:** This seasoning process is important to ensure proper Flat Top Grill performance. Seasoning the cooktop makes it naturally nonstick and keeps out excess moisture, which can cause rust. Make sure that all internal components have been properly installed prior to the seasoning process and that there is no food on the Flat Top Grill during seasoning.

## TOOLS NEEDED

- Traeger® Flat Top Grill Seasoning & Cast Iron Conditioner or canola oil
- Clean cotton cloth
- Metal tongs
- Watch or timer

## LEVEL GRILL

1

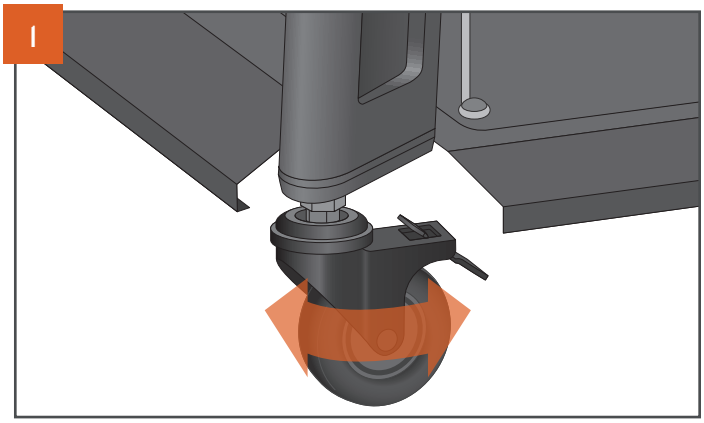

Level grill by adjusting the position of each caster individually. To adjust caster position, set the caster lock and rotate the caster by hand. Adjusting to the right will shorten the position, and to the left will extend it. Once you've got your desired level, proceed to step 2.

2

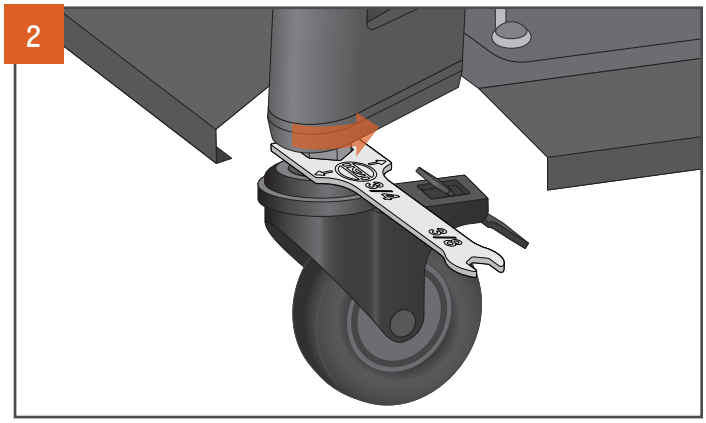

Tighten jam nut all the way with included wrench to lock leveling. The jam nut is underneath the leg but above the caster.

**⚠ WARNING Personal Injury Hazard**

Do not exceed 1.25" of leveling, or the caster will fall out of the leg, possibly damaging the product or injuring you. The maximum extension should be less than the width of the large side of the assembly wrench.

## START SEASONING:

3

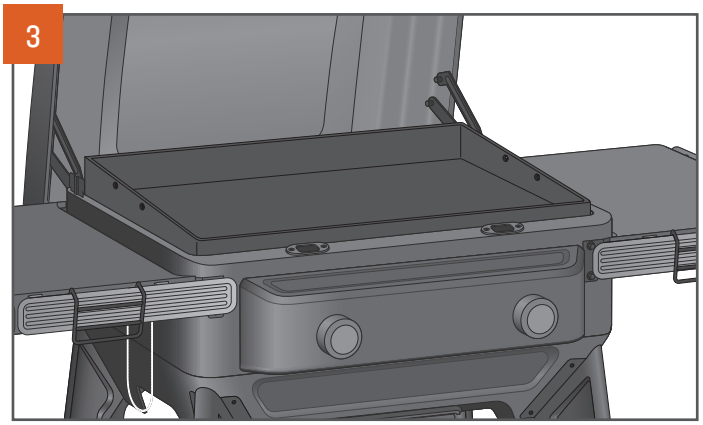

Preheat the Flat Top Grill on high for 10 minutes. Make sure the propane tank valve has been turned to the fully open position. Press the control knob and rotate to the ignite position (). Turning the knob opens the control valve and activates the igniter. Look at the burner through the flame window to confirm that the burner has successfully lit. If the burner did not light, turn the control knob back to the OFF (O) position and repeat until burner ignition is confirmed.

**PRO TIP:** In cold weather the flame window may fog when the burner is initially lit. If fogging occurs, this means the flame is lit and fog should dissipate within 20 seconds. If flame window is fogged up, always confirm that the burner has successfully lit by looking between the gap under or on the side of the cook surface until you see the flame.

**⚠ WARNING Fire Hazard**

- If the Flat Top Grill does not ignite within 5 seconds, turn burner controls OFF (O), wait 5 minutes to allow gas to dissipate, and repeat ignition procedure. If Flat Top Grill does not ignite, gas will continue to flow out of burner and could accidentally ignite.

# ONBOARDING 2: SEASONING YOUR FLAT TOP GRILL CONTINUED

4

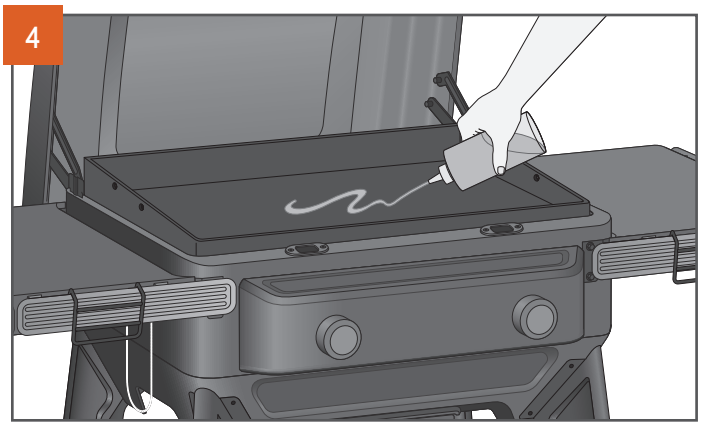

Once the Flat Top Grill is hot, squeeze about 2-3 Tbsp of the conditioner or your oil over the cooktop in a zigzag pattern, covering the entire cooktop.

5

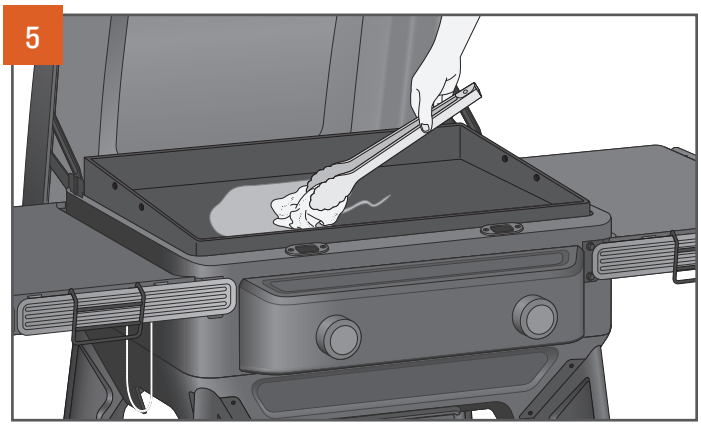

Using tongs clasping a clean towel or paper towel, spread the conditioner evenly over the surface and up the sides. It will immediately begin to smoke. Using a clean side of the towel, wipe off any excess conditioner or oil to create a very thin layer.

6

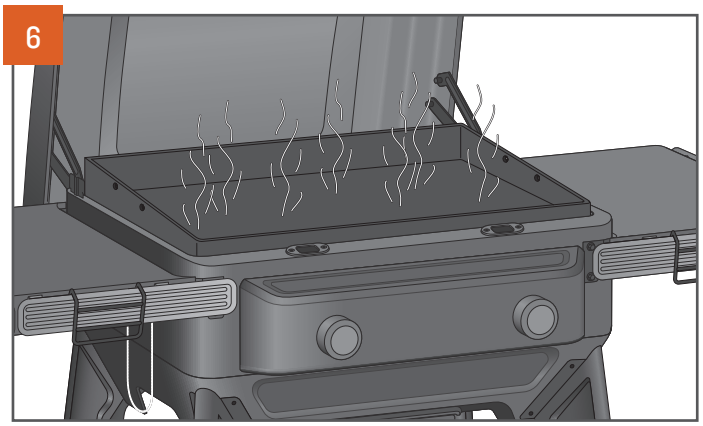

Continue heating until the smoking ends—about 10-15 minutes.

7

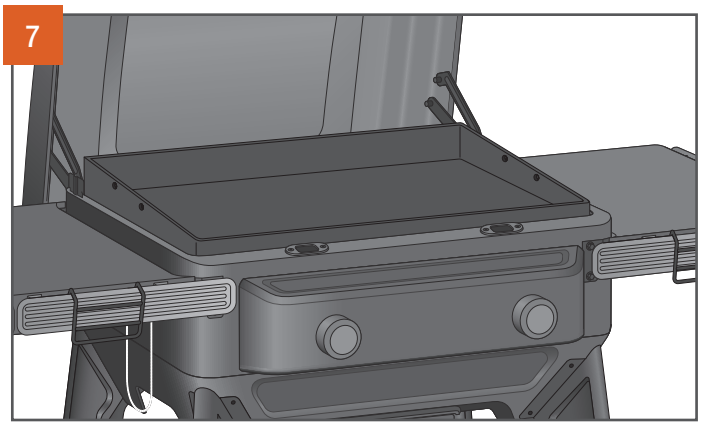

Leaving the heat on high, repeat the oiling and smoking for a total of five times. The surface will become darker and smoother.

**PRO TIP:** Let the cooktop cool for at least 30 minutes before cooking on it.

# USING YOUR FLAT TOP GRILL

## YOU WILL NEED TO BEGIN WITH THESE STEPS EVERY TIME YOU USE YOUR FLAT TOP GRILL.

### PRE-GRIDDLING CHECKLIST

1. Perform needed maintenance:
   - Check EZ-Clean™ Grease Keg. Remove keg liner (if full) and replace it with a new grease keg liner.
   - Check fuel level.
   - Check that your propane tank is properly connected and the valve is open.
   - Inspect the hose of the Flat Top Grill's LP tank before each use. If there is evidence of abrasion, wear, cuts, or leaks, the hose must be replaced prior to operation.
   - Inspect the grease chute to ensure it is not clogged, and clean if necessary.
2. Before using the Flat Top Grill, make sure it is correctly assembled with all parts present, including the following:
   - Flat Top Grill cooktop
   - Grease chute
   - EZ-Clean™ Grease Keg and keg liner
   - Propane tank
3. Make sure the Flat Top Grill is at least 20" (50.8 cm) away from combustibles (see page 2).
4. Make sure the Flat Top Grill is leveled (see page 8 or 11 for leveling instructions).
5. Always keep the Flat Top Grill lid open when preheating and cooking. Make sure to always open and close lid with care.

**GENERAL COOKING** It's super easy to cook on a Wasatch™ Flat Top Grill. With two TruZone™ regions on the cooktop, you can cook different foods at different temperatures at the same time. What follows are some tips to get the very best results from your Wasatch™ Flat Top Grill.

1

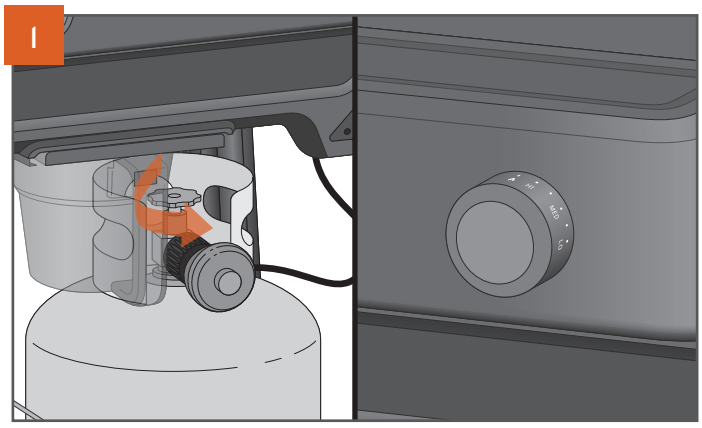

Make sure the propane tank valve has been turned to the fully open position. Press the control knob and rotate to the ignite position (). Turning the knob opens the control valve and activates the igniter. Look at the burner through the flame window to confirm that the burner has successfully lit. If the burner did not light, turn the control knob back to the OFF (O) position and repeat until burner ignition is confirmed.

**PRO TIP:** In cold weather the flame window may fog when the burner is initially lit. If fogging occurs, this means the flame is lit and fog should dissipate within 20 seconds. If flame window is fogged up, always confirm that the burner has successfully lit by looking between the gap under or on the side of the cook surface until you see the flame.

**⚠ WARNING Fire Hazard**

- If the Flat Top Grill does not ignite within 5 seconds, turn burner controls OFF (O), wait 5 minutes to allow gas to dissipate, and repeat ignition procedure. If Flat Top Grill does not ignite, gas will continue to flow out of burner and could accidentally ignite.

2

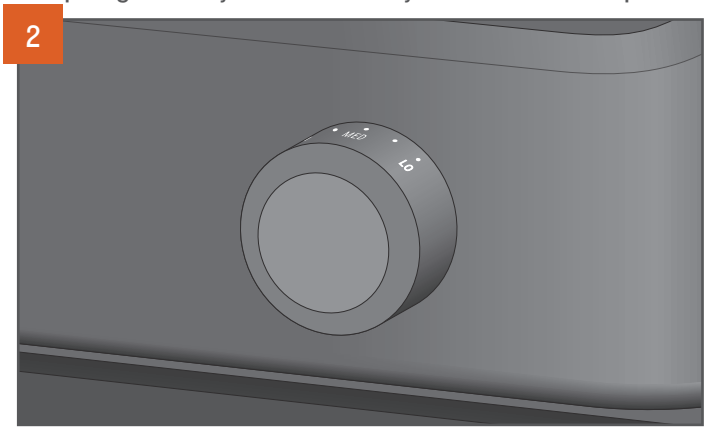


Preheat your Flat Top Grill for up to 15 minutes or until the surface reaches the desired cooking temperature.

**⚠ WARNING Fire/Burn Hazard**

**NEVER** close the lid of the Flat Top Grill when preheating or operating the grill.

3

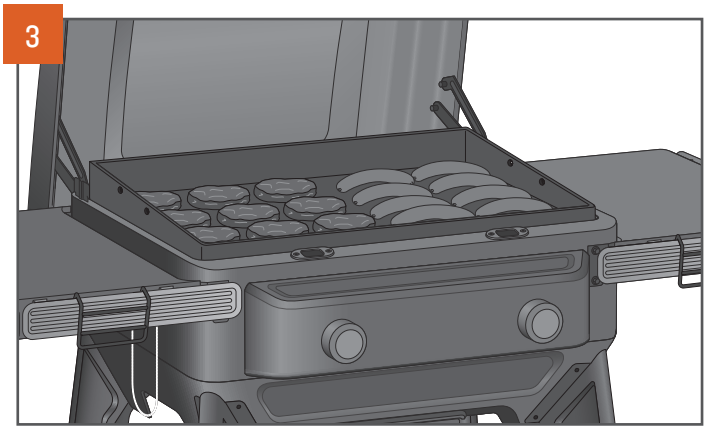

Once preheated, cook away! Be sure to oil the Flat Top Grill before cooking, no matter the recipe you choose.

**PRO TIP:** Check your Traeger App for great recipes!

# PRO TIPS FOR COOKING ON YOUR FLAT TOP GRILL

**TIP 1:** Choose the right kinds of food to cook. Your Flat Top Grill excels at cooking foods you would normally cook in a sauté pan, wok, or skillet. Though you can cook over low heat, Flat Top Grills are not the place to fully cook big hunks of meat like pork shoulder or whole chickens—save those for your Traeger® Pellet Grill. Flat Top Grills are a great place to sear large hunks of meat that are already fully cooked or that will be finished by other methods.

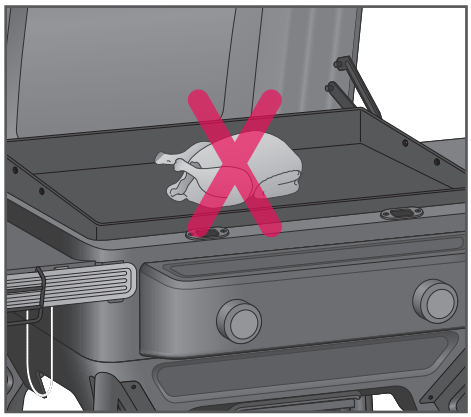

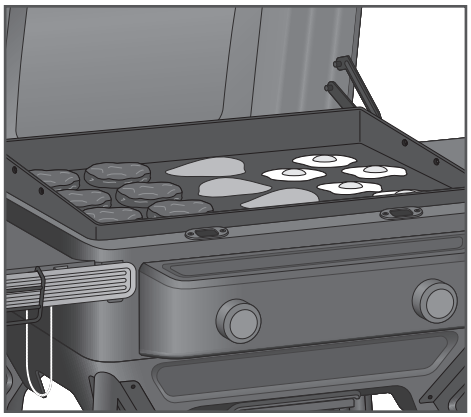

**TIP 2:** Preparation! Have the food you plan to cook prepped and any tools you need handy. Use one Flat Top Grill shelf for raw ingredients and utensils that touch them, and the other for cooked food. This helps prevent any cross-contamination as you cook up your feast.

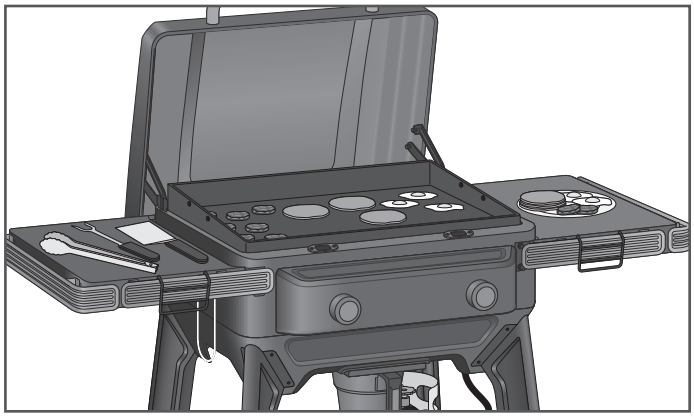

**TIP 3:** Searing. If you want to give your food a nicely browned crust, be sure to leave space between pieces to encourage a good sear. (If packed too close, foods can steam in their own juice.) Then wait until one side is nicely browned before flipping.

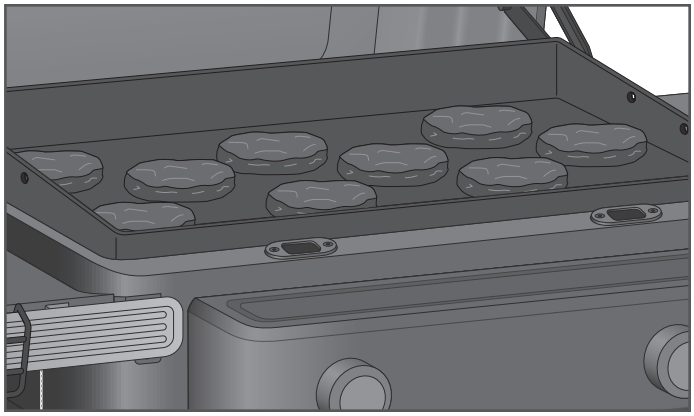

**TIP 4:** Your Flat Top Grill has two TruZone™ regions. You can utilize two zones at one time by keeping food warm in one zone, and searing in the other!

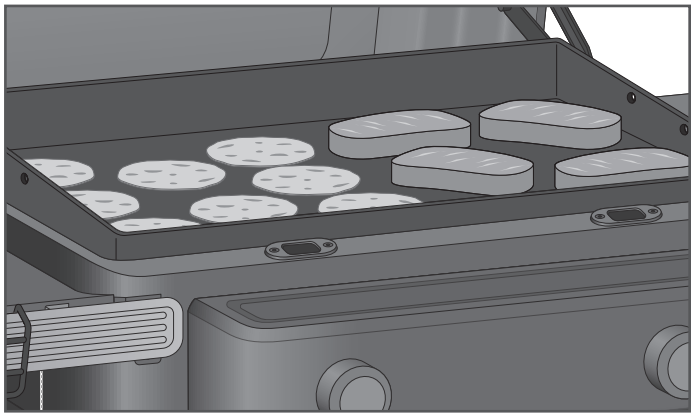

# WHEN COOKING IS COMPLETED

## CLEAN AND RE-SEASON

1

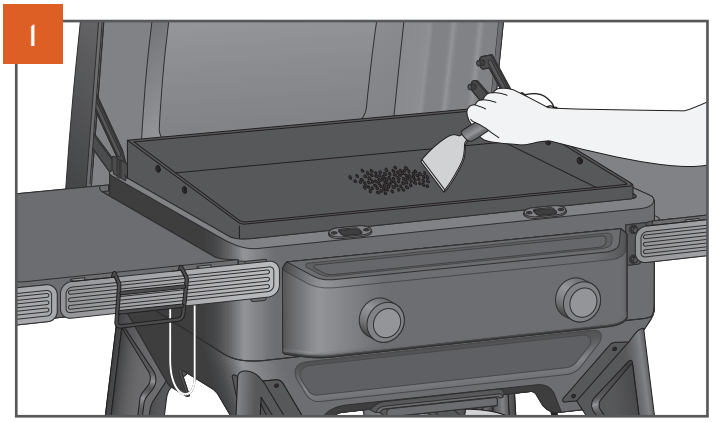

While the Flat Top Grill is still hot, use a Traeger® Wasatch™ Flat Top Grill Scraper (sold separately) to scrape any cooking residue off the Flat Top Grill into the grease chute.

2

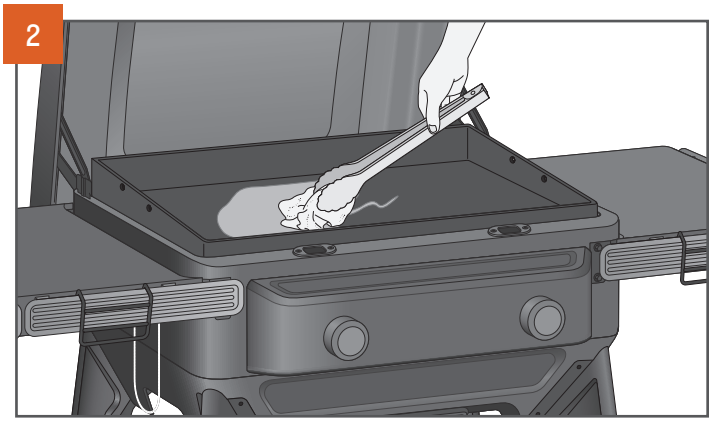

Using tongs clasping a clean towel or paper towel, lightly oil the cooktop with canola oil or another cooking oil with a high smoke point, such as flax or grapeseed. Spread in a thin layer so that it covers the entire cooktop. Heat until the smoking ends, about 10 minutes.

**TIP:** Be sure to condition the side walls of your cooktop for added protection and rust prevention.

3

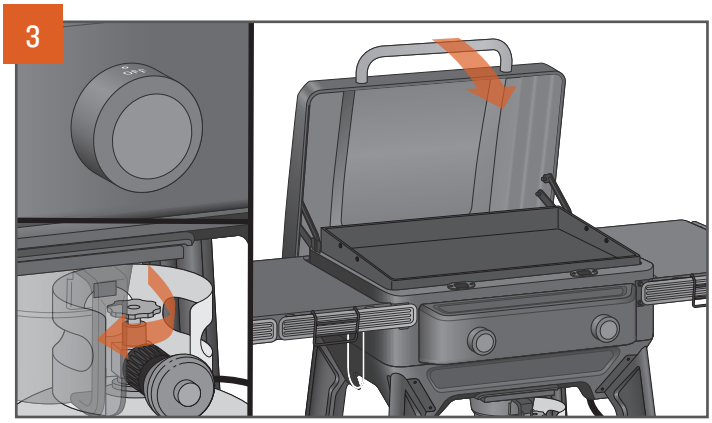

Turn both control knobs to the OFF (O) position, close the lid, and turn the propane tank valve closed. Always shut off the propane tank valve completely after every cook.

4

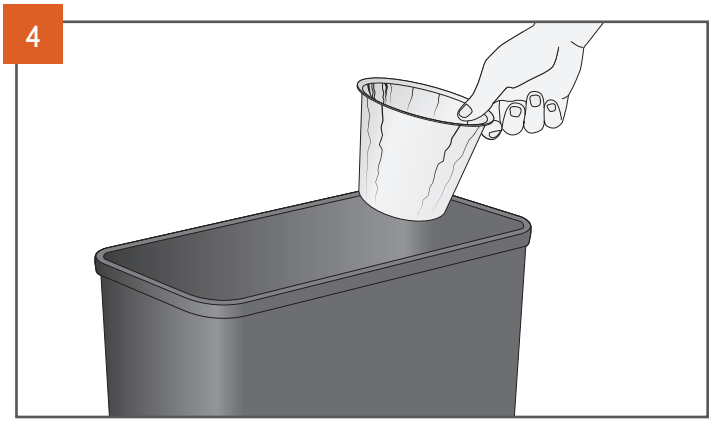

If needed, empty and throw away the EZ-Clean™ Grease Keg liner (see next page). Once the Flat Top Grill is completely cool, cover it with a Traeger® Flat Top Grill Cover.

**TIP:** Ensure the contents of the Keg are cool before discarding.

# GREASE MANAGEMENT

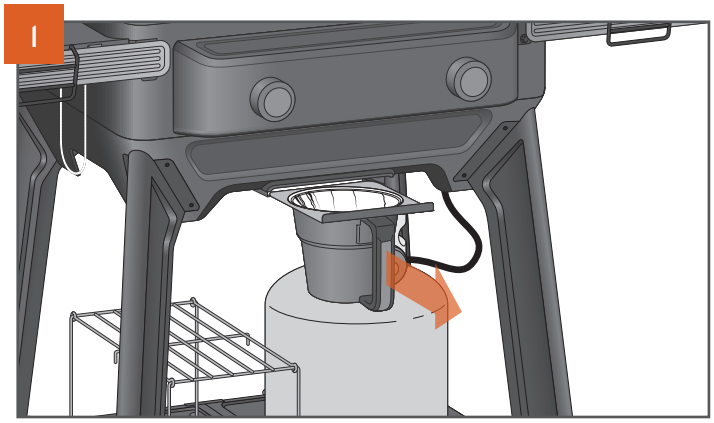


Slide out the EZ-Clean™ Grease Keg with keg liner.

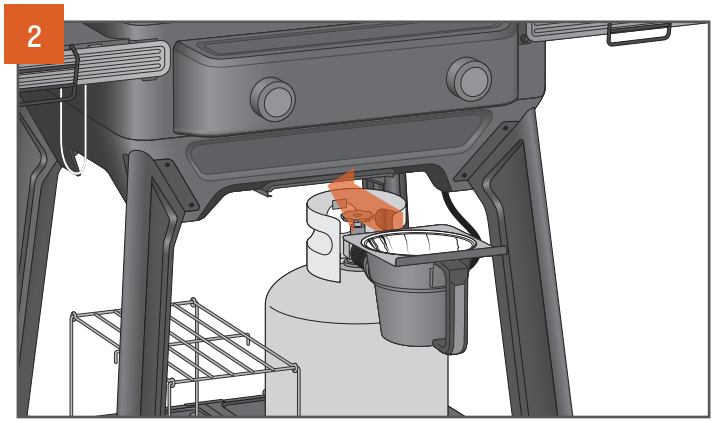


Empty and discard the keg liner. Line the EZ-Clean™ Grease Keg with a new liner and slide it back into the bracket on the bottom of the Flat Top Grill (you will feel it "click" into place when installed fully).

**TIP:** Ensure the contents of the Keg are cool before discarding.

# SHUTTING DOWN YOUR FLAT TOP GRILL

## THE SHUTDOWN PROCESS EXPLAINED

The shutdown cycle is crucial to the success and high-quality performance of your Traeger® Wasatch™ Flat Top Grill.

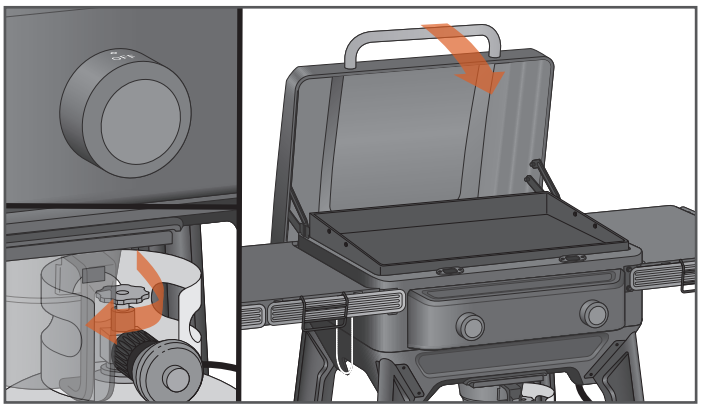

Turn both control knobs to the OFF (O) position, wait until the cooktop is cool, close the lid, and turn the propane tank valve closed.

**TIP:** Always oil cooktop per instructions in "When Cooking is Completed" prior to shutdown.

# MAINTAINING YOUR FLAT TOP GRILL

## CLEANING FLAT TOP COOKTOP

To clean your Flat Top Grill, you will need a clean cloth or paper towels, Traeger® Grill Cleaner, water, a Traeger® Wasatch™ Flat Top Grill Scraper (not included), and Traeger® Flat Top Grill Seasoning & Cast Iron Conditioner or canola oil.

1

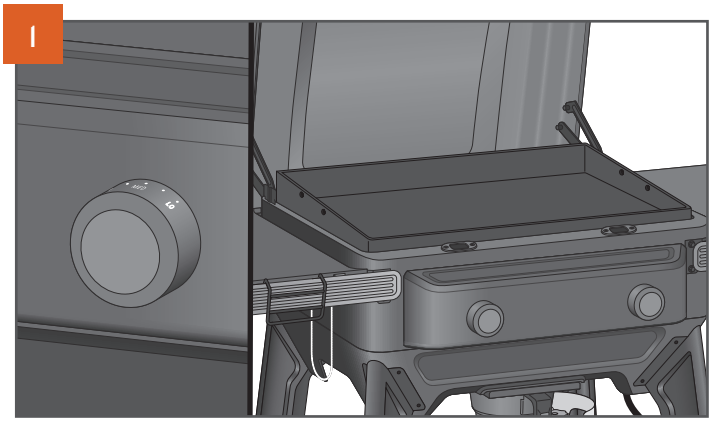

Heat up the cooktop on medium heat for 10 minutes.

2

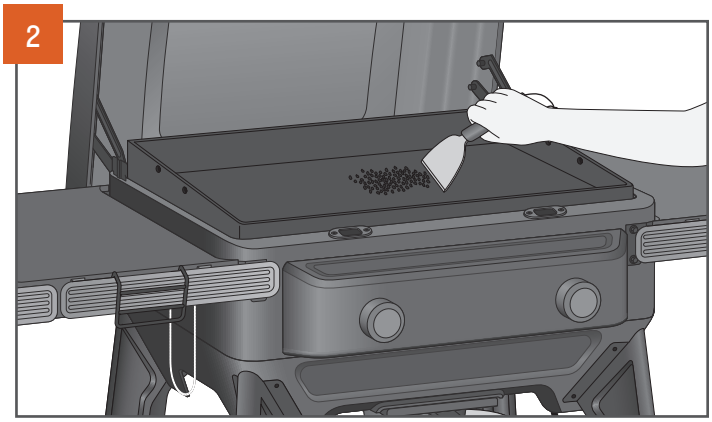

Using a scraper, scrape the entire cooktop clean, directing any bits of food and grease into the grease chute. Repeat as needed until all debris has been removed.

3

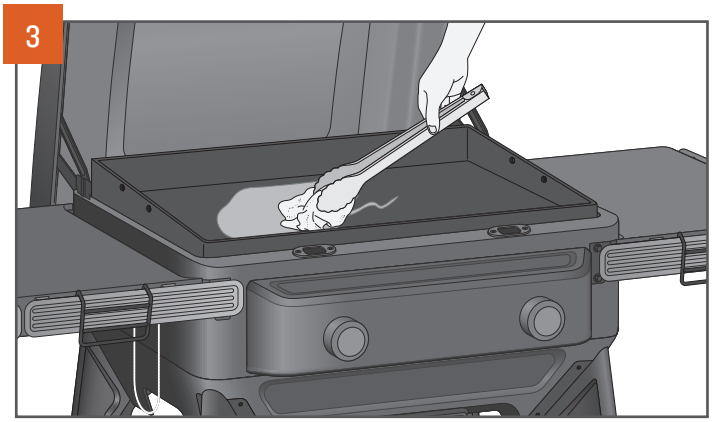

With the Flat Top Grill still hot, use tongs clasping a clean towel or paper towel to apply a thin layer of Traeger® Flat Top Grill Seasoning & Cast Iron Conditioner or canola oil. The conditioner must cover the whole cooktop (including the walls and edges). Heat until the smoking ends—about 10 minutes.

4

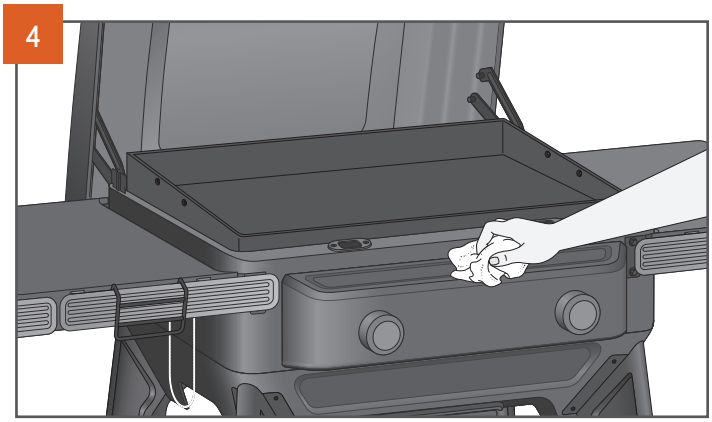

To clean the body of the Flat Top Grill, turn off the grill and let it cool. Once the Flat Top Grill is cool, use a cloth or paper towel and Traeger® Grill Cleaner to wipe any messy areas on the Flat Top Grill body. Be sure to clean the flame windows in front of the cooktop. **DO NOT use Traeger® Grill Cleaner on the cook surface.**

5

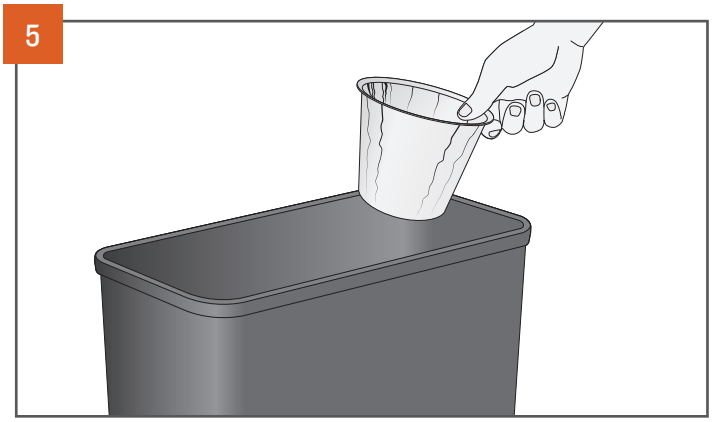

Empty the EZ-Clean™ Grease Keg and install a new Traeger® keg liner.

## CHECKING GREASE

Your EZ-Clean™ Grease Keg should be checked before and after every cook.

### TIPS:

- Make sure grease has cooled before handling the keg.
- The grease chute can be removed and washed in the dishwasher—just remember to replace it before your next cook.

# MAINTAINING YOUR FLAT TOP GRILL CONTINUED

## CLEANING BURNERS

Sometimes grime and/or insect debris such as webs may accumulate in the burner tube or portholes, especially after periods of non-use or storage. A clogged tube can lead to a fire beneath the appliance or poor performance.

1

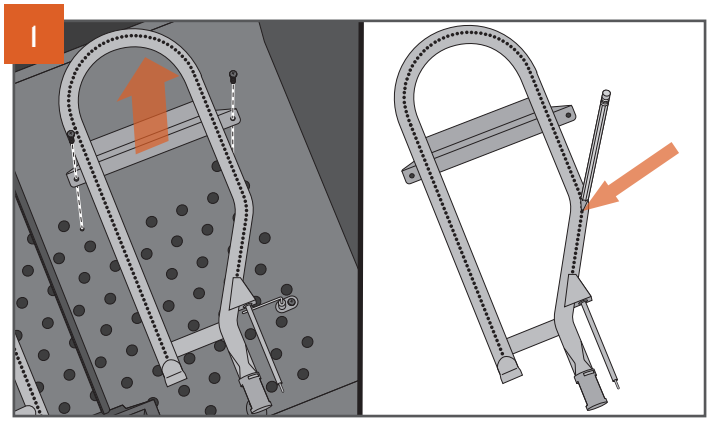

Remove burners from the Flat Top Grill by unscrewing the two fasteners on the burner brackets. With burner removed, insert a pen tip or paperclip into the clogged burner inlet hole to clear out any debris that may have accumulated.

2

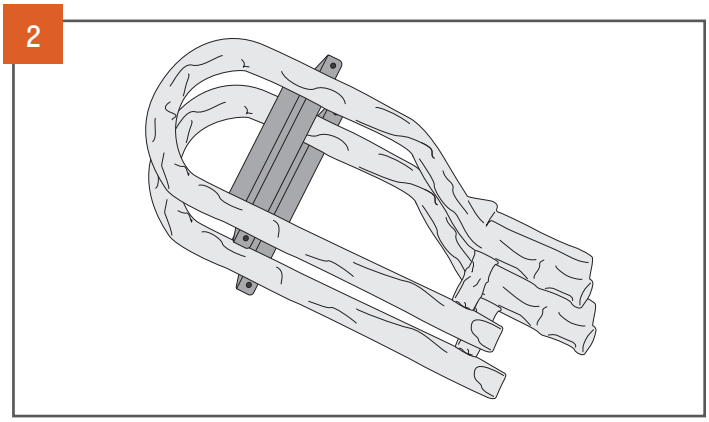

When storing the Flat Top Grill or before an extended period of non-use, remove the burners and wrap them with aluminum foil to reduce the risk of insects entering the burner holes.

**⚠ WARNING Fire Hazard**

Always remove all foil before you reattach the burners and use the Flat Top Grill again.

## STORING

Your Flat Top Grill can be stored in two orientations:

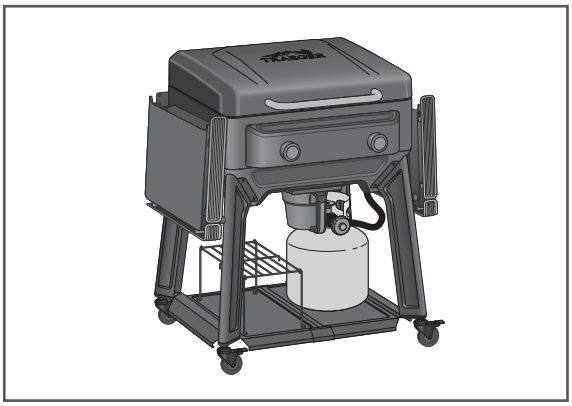

In limited space, fold down the side shelves.

OR

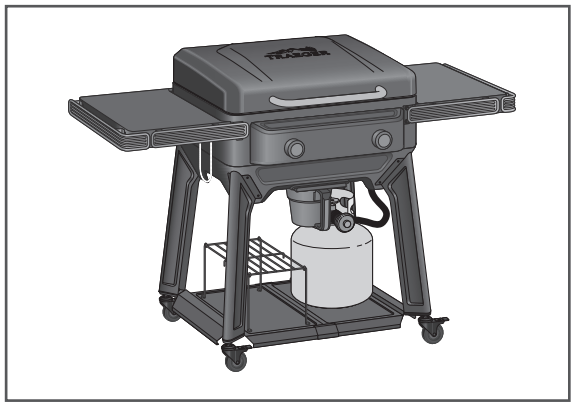

If more space is available, the side shelves can be left extended.

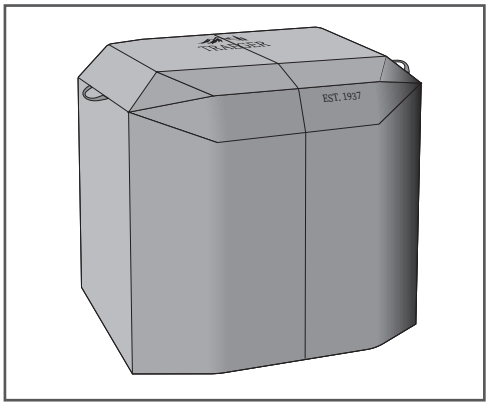


Use the Traeger® Wasatch™ Flat Top Grill Cover for protection when storing. When using the Traeger® Wasatch™ Flat Top Grill Cover, the shelves must be folded down.

## AVOIDING RUST

A good initial seasoning and post-cook seasonings are crucial for preventing rust; however, if your Flat Top Grill becomes rusty, follow these steps:

1

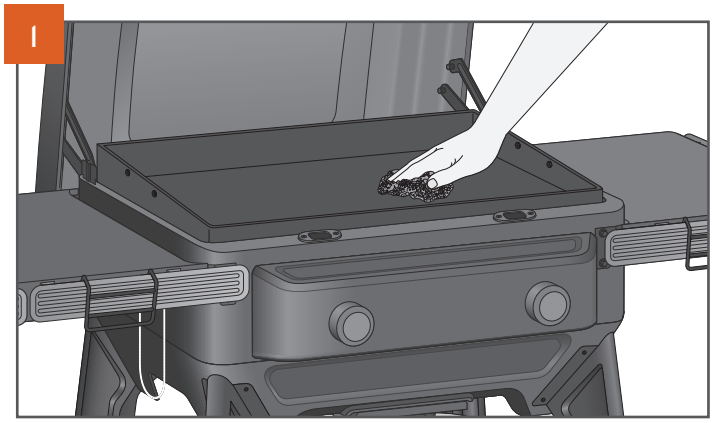

Use a nonabrasive scouring pad and water to remove rust. If rust cannot be removed with the nonabrasive scouring pad, you can use 220 grit sandpaper to remove rust from affected areas.

2

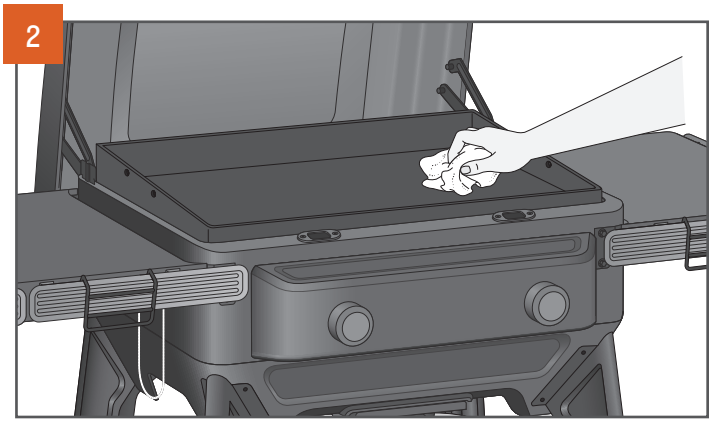

Using water and a cloth, wipe off all of the rust residue. The cooktop should be free of any loose debris created in Step 1. Wipe up all water from this process with a clean, dry towel or cloth. Before performing Step 3, make sure no water is present on the cook surface. Do not attempt to evaporate the excess water by heating the grill.

3

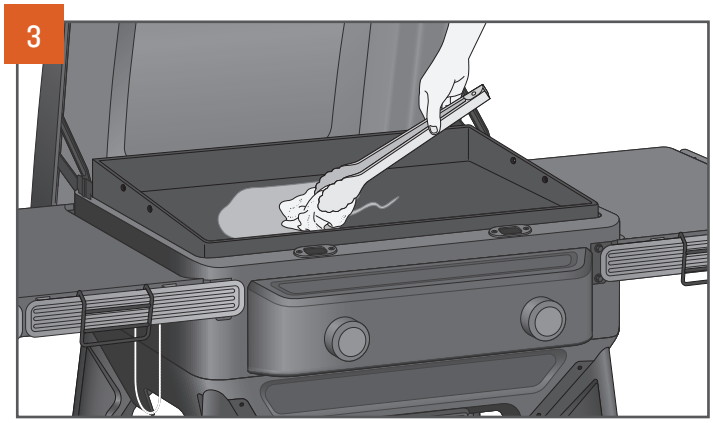

Re-season the cooktop following the seasoning process in "When Cooking is Completed," or by following the directions on the app.

### FREQUENTLY ASKED QUESTIONS

Scan this QR code to take you to Frequently Asked Questions.

## MAINTAINING GREASE CHUTE

Make sure the grease chute is clean and free of blockages before every use. If the chute ever gets clogged, you can remove and clean it.

**NOTE:** Clean the grease chute regularly.

**TO REMOVE:**

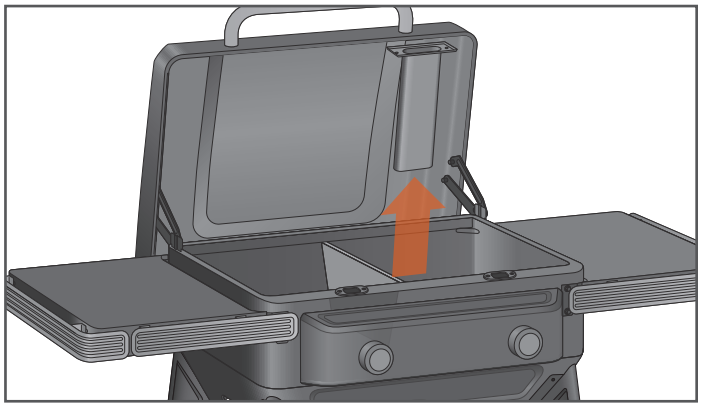

**TO REPLACE:**

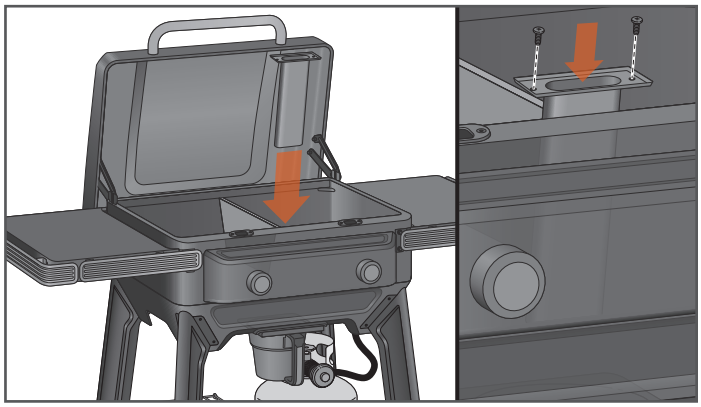

# TROUBLESHOOTING

**If your Flat Top Grill is not igniting, check to see if:**

1. Your propane tank valve has been turned on (is fully open).
2. There is a good connection between the regulator hose and the propane tank (hand tight).
3. There is a consistent spark from the igniter after turning the knob. Check by removing the cooktop.

**If the Flat Top Grill is not extinguishing:**

Check the control knobs to make sure they are in the OFF (O) position and can move freely (when pressed in, they should pop back out).

**If your burners are putting out low or uneven flames, there are several possible causes:**

1. The regulator safety feature has been tripped (see below).
2. Empty or low propane tank fuel level. As the level of liquid propane in your tank gets low, the burners will still operate but with low or uneven flame height. Replace or refill the propane tank to resolve.
3. The propane tank valve is not opened sufficiently.
4. The regulator hose is not fully attached to the tank valve.
5. A bend or kink in the regulator hose is restricting flow.
6. There may be obstructions in the burner tubes.

**If the regulator safety feature is tripped:**

Your grill regulator is equipped with a safety feature that is designed to limit the flow of propane if the flow through the regulator is higher than normal. However, it is possible that it may trip from normal usage. Gas flow may also be stopped, making it impossible to light the burners. If you suspect your regulator safety feature has tripped, do the following:

1. Ensure that grill control knobs and propane tank valves are off, and in the closed position.
2. Inspect the hose and manifold for leaks, and ensure that the connections between the manifold and regulator are not loose.
3. Detach the regulator from the propane tank.
4. Turn control knobs to high for 2 minutes.
5. Turn control knobs to off.

# OPERATING TIPS

1. Your Traeger® Wasatch™ Flat Top Grill comes with two independently controlled zones with heat lock heat shields. You can set the zones to different temperatures throughout your cook, from low to high. Zones are perfect for cooking more than one food type. For example, when cooking fajitas, you can sear the steak on a high heat zone and brown the peppers and onions over medium.
2. For best results, always keep the lid open during preheating and cooking.
3. Always take into account the type of food you are cooking:
   - Thin foods need high heat and shorter cook times, while thicker foods need low heat and longer cook times.
   - Vegetables take longer to cook than meats at the same cooking temperatures.
   - Always check that the internal temperature of the meat that you are cooking reaches a safe temperature for eating.
4. Always clean your Flat Top Grill and re-season it regularly to ensure your cook surface retains its nonstick properties.
   a. Scrape any leftover food into the grease trap.
   b. Apply oil to the Flat Top Grill in a thin layer.
   c. Check EZ-Clean™ Grease Keg after every cook; clean if necessary.
5. Re-season the Flat Top Grill after every cook for best performance. After scraping to remove any food particles, apply a thin layer of Traeger® Flat Top Grill Seasoning & Cast Iron Conditioner and heat it until it stops smoking.
6. Your Flat Top Grill can be used to warm sauces or melt butter. Put the butter or buffalo sauce in a thin-walled pan in the corner of your Flat Top Grill to keep it out of the way, with that zone set to medium. You will have melted, saucy additions to spice up your meal.

# SERVICE

**TRAEGER'S LEGENDARY CUSTOMER SERVICE** is the best out there. If you have any questions about your Traeger® Flat Top Grill or need tips, our seasoned experts have your back. We're here for you 365 days a year, including holidays. For assistance with assembly, installation, safe operation, parts, or general customer service, you can reach us at:

## TRAEGER'S CUSTOMER SERVICE

Please visit: traeger.com/support
Phone: US/CA: **1-800-TRAEGER** 6:00 a.m. – 10:00 p.m. MT
Website: **traeger.com**

Address: TRAEGER PELLET GRILLS LLC
533 South 400 West
Salt Lake City, UT 84101

## TRAEGER'S CUSTOMER SERVICE IS JUST A SCAN AWAY

1

Open the camera on your phone and point it at the QR code.

2

Wait for the camera to register and tap the notification or banner when it appears on your screen.

3

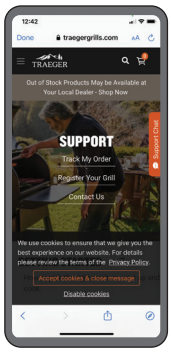


Information related to the code will automatically load.

### TRY IT OUT

Scan this QR code to take you to Traeger's Support home page.

# TRAEGER® FLAT TOP GRILL WARRANTY

## 5-YEAR LIMITED WARRANTY

Traeger Pellet Grills LLC warrants this Traeger® Flat Top Grill or the components, coverage, and warranty period listed in the table below under normal use and proper maintenance. This warranty gives you specific legal rights, and you may also have other rights which may vary among states and provinces. The warranty period starts from the date of original purchase from traeger.com or a Traeger authorized dealer. A list of Traeger authorized dealers is available at https://www.traeger.com/dealers (together each an "Authorized Seller"). The warranty period and coverage for the replacement parts shall be as follows:

| Warranty Periods and Coverage | | |
|---|---|---|
| **Components** | **Warranty Period** | **Coverage** |
| Body, Legs | 5 Years | Will not rust through |
| Flat Top Cooktop | I Year | Material and Manufacturing Defects |
| Burners | I Year | Material and Manufacturing Defects |

Traeger's entire liability and your exclusive remedy shall be replacement of the defective parts of your Traeger® Flat Top Grill, if any. Original part(s) approved for return by Traeger's Customer Service must be returned prepaid. Traeger may replace defective parts with new or refurbished parts, at Traeger's sole discretion on an as available basis within ninety days. Without limiting the exclusions stated above, there is not warranty coverage for: (i) paint damage caused by grease fires, (ii) UV exposure, (iii) normal wear and tear; and (iv) warping of the Flat Top Grill surface.

Traeger® Flat Top Grills are designed to be modular for simple repair by regular users. Traeger's entire obligation under this warranty shall be to provide you with replacement of any defective parts and to provide you with instructions on how to make the replacement yourself. Traeger may replace defective parts with new or refurbished parts. Traeger reserves the right to inspect any Flat Top Grill (shipping paid by Traeger) and to analyze any usage information including, without limitation, any digital connected grill data (to the extent covered by our data protection policy). To validate and process a warranty claim Traeger may require that you provide reasonable evidence of your issue, including participating in video chats, phone conversations, providing photos, and providing other relevant information. Labor charges connected with the replacement of defective parts and freight charges to ship parts shall be paid at your expense.

The limitations in the following paragraph do not apply to residents of Quebec to whom the Quebec Consumer Protection Act applies.

FOR GREATER CERTAINTY AND TO FULLEST EXTENT PERMITTED BY LAW, TRAEGER PELLET GRILLS LLC SHALL NOT BE LIABLE UNDER THIS OR ANY IMPLIED WARRANTY FOR INCIDENTAL, CONSEQUENTIAL DAMAGES, INDIRECT, SPECIAL, LOSS OF DATA, EXEMPLARY, PUNITIVE OR ENHANCED DAMAGES, LOST PROFITS OR REVENUES OR DIMINUTION IN VALUE ARISING OUT OF OR RELATING TO YOUR USE OF YOUR FLAT TOP GRILL, REGARDLESS OF (A) WHETHER SUCH DAMAGES WERE FORESEEABLE, (B) WHETHER OR NOT TRAEGER WAS ADVISED OF THE POSSIBILITY OF SUCH DAMAGES AND (C) THE LEGAL OR EQUITABLE THEORY (CONTRACT, TORT, OR OTHERWISE) UPON WHICH THE CLAIM IS BASED, AND NOTWITHSTANDING THE FAILURE OF ANY AGREED OR OTHER REMEDY OF ITS ESSENTIAL PURPOSE. THIS WARRANTY GIVES THE RETAIL CUSTOMER SPECIFIC LEGAL RIGHTS AND THE CUSTOMER MAY HAVE OTHER RIGHTS WHICH VARY AMONG STATES AND PROVINCES. BOTH YOU AND TRAEGER INTEND FOR THIS WARRANTY TO BE YOUR EXCLUSIVE REMEDY FOR A DEFECTIVE FLAT TOP GRILL.

This warranty shall be void if: (i) the Flat Top Grill is not assembled or operated in accordance with Traeger's operating instructions provided with this grill; (ii) the Flat Top Grill is not purchased from an Authorized Seller; (iii) the Flat Top Grill is resold or traded to another owner; (iv) there has been use of any incompatible third party components; (v) the Flat Top Grill has been used in a commercial or food service application; (vi) the user has allowed the Flat Top Grill to become damaged, abused, or otherwise failed to maintain the Flat Top Grill in accordance with Traeger's operating instructions; or (vii) there has been any unapproved modification of this Flat Top Grill.

Please note that because Traeger is unable to oversee or control the quality of its products sold by unauthorized sellers, Traeger's warranty extends only to products purchased from an Authorized Seller.

To process a warranty claim, contact Traeger's customer service at the phone number or address listed above. Traeger requires proof of your date of purchase from an Authorized Seller. You should retain your sales slip or invoice along with this manual with your valuable documents.

Customers outside of the United States and Canada should note that NOT all warranty policies stated herein are consistent globally. Customers should contact the local distributor in their current country from the list at International Support for instructions regarding warranty claims specific to that country. The process described herein will not work for international warranty requests.

## ADDITIONAL IMPORTANT WARRANTY INFORMATION

- We are not responsible for items lost in transit. For this reason, we highly recommend getting a tracking number or delivery confirmation when shipping your package.
- The product you send to us becomes the possession of Traeger and will not be returned to you.

Traeger will determine if your warranty claim is covered under this warranty policy at Traeger's sole and complete discretion, and failure to follow the required procedures may void your warranty claim. This warranty gives you specific legal rights, and you may also have other rights which vary among states, provinces, and countries.

TRAEGER®
WOOD FIRED GRILLS

TRAEGER®
WOOD FIRED GRILLS

# WELCOME TO THE TRAEGERHOOD™

**FOLLOW US @TRAEGERGRILLS**

Traeger Pellet Grills LLC
533 South 400 West
Salt Lake City, UT 84101

traeger.com

© 2025 Traeger Pellet Grills LLC. All Rights Reserved.

Patent: www.traeger.com/patents